WIRING INSTRUCTIONS FOR STAR SWITCH #SP3860-2

(ON/OFF)(ON/OFF) Switches

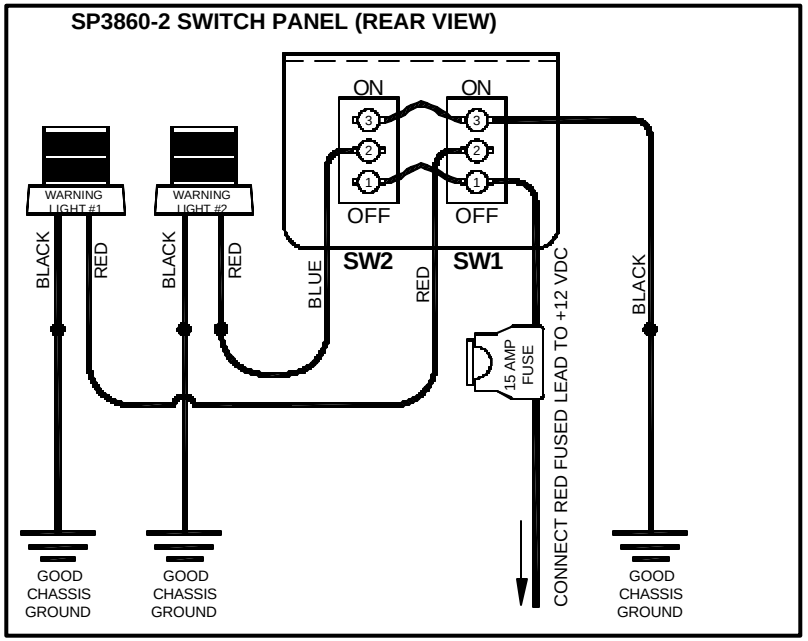

1. **IMPORTANT:** Please read all of the following instructions before installing your new switch. This instruction sheet applies only to the model listed at the top of this sheet.
2. **CAUTION:** All of our DC powered warning lights are polarity sensitive. These lights are polarity protected *only if the appropriate fuse* is used. All wires connected to the positive terminal of the battery should be fused at the battery for their rated load, *in addition to* the fuse provided at the switch panel. **Testing the light before this fuse is properly installed will void the warranty on the switch and light.**
3. The black wire from terminal 3 of SW1 is the ground lead and should be connected to a good chassis ground.
4. Connect the red wire from terminal 2 of SW1 to the red wire from your first warning light.
5. Connect the blue wire from terminal 2 of SW2 to the red wire from your second warning light.
6. Connect the fused red wire from terminal 1 of SW1 to the positive side of the 12VDC power through an appropriate fuse based upon the current draw of the light(s) you are installing. *Check the label on the warning light for proper voltage and current.*
7. When properly installed, SW1 will be on the left side of the switch panel (front view) and switch warning light #1 on and off, and SW2 will be on the right (front view) and switch warning light #2 on and off.

If you have any questions concerning this or any other Star product, please contact our Customer Service Department at (585) 226-9787.

ONE YEAR LIMITED WARRANTY

The manufacturer warrants each new product, under normal use, against factory defects in material and workmanship for one year after the date of purchase. The owner will be responsible for returning to the Service Center any defective item(s) with the transportation costs prepaid. The manufacturer will, without charge, **repair or replace *at its option***, products, or part(s), which its inspection determines to be defective. Repaired or replacement item(s) will be returned to the purchaser with transportation costs prepaid from the service point. A copy of the purchaser's receipt must be returned with the defective item(s) in order to qualify for the warranty coverage.

Exclusions from this warranty include, but are not limited to, bulbs, strobe tubes, domes, and/or the finish. This warranty shall not apply to any light, which has been altered, such that in the manufacturer's judgment, the performance or reliability has been affected, or if any damage has resulted from abnormal use or service. This warranty does not apply to defect or damage occurring as a result of disaster, accident, abuse, misuse, lightning, power surges, or failure to follow instructions in any enclosed manuals. Any damage or defects occurring as a result of any unauthorized service or repairs by unauthorized persons shall be excluded from this warranty.

There are no warranties expressed or implied (including any warranty of merchantability or fitness), which extend this warranty period. **The loss of use of the product, loss of time, inconvenience, commercial loss or consequential damages, including costs of any labor, are not covered.** The manufacturer reserves the right to change the design of the product without assuming any obligation to modify any product previously manufactured.

This warranty gives you specific legal rights. You might also have additional rights which may vary from state to state. Some states do not allow limitations on how long an implied warranty lasts. Some states do not allow the exclusion or limitation of incidental or consequential damages. Therefore, the above limitation(s) or exclusion(s) may not apply to you.

If you have any questions concerning this or any other product, please contact our **Customer Service Department** at (585) 226-9787.

If a product must be returned for any reason, please contact our Customer Service Department to obtain a Returned Goods Authorization Number (RGA #) before you ship the product back. Please write the RGA # clearly on the package near the mailing label.

STAR WARNING SYSTEMS

Star Headlight & Lantern Co., Inc.

455 Rochester Street
Avon, NY 14414

Phone: 585-226-9500
Toll Free Fax: 888-478-2797

www.star1889.com

REV. E 11/4/04 PLITSTR121